AXOR

hansgrohe

Vernis Blend
4-hole rim mounted bath mixer
Surfaces: **Matt Black** Article Number: **71456670**

Description

product features

- consists of: 4-hole rim mounted bath mixer, hand shower
- 2 functions
- projection 211 mm
- connection type: G ½
- spray type mixer: normal spray
- spray type hand shower: Rain, IntenseRain
- maximum pull-out length of hand shower: 1.60 m
- maximum flow rate at 3 bar: 25 l/min
- flow rate for bath spout at 3 bar: 25 l/min
- flow rate of hand shower at 3 bar: 17 l/min
- ceramic valves hot/ cold 90°
- non-return valve
- suitable for continous flow water heaters
- connection dimension: DN15
- maintenance opening required

Technology

AirPower

Product image

Scale drawing

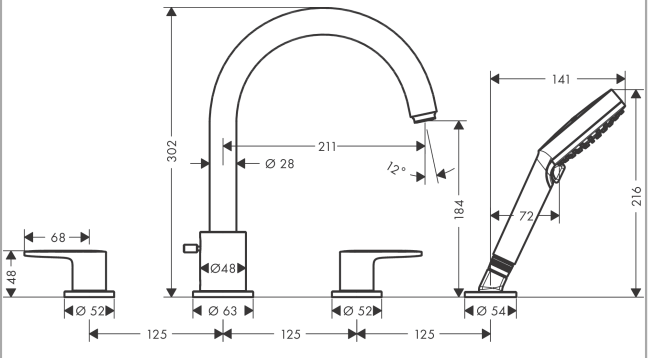

Vernis Blend
4-hole rim mounted bath mixer
Surfaces: **Matt Black** Article Number: **71456670**
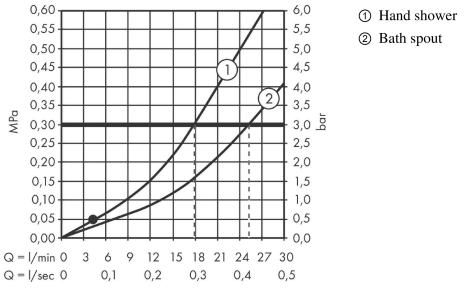
Flowchart